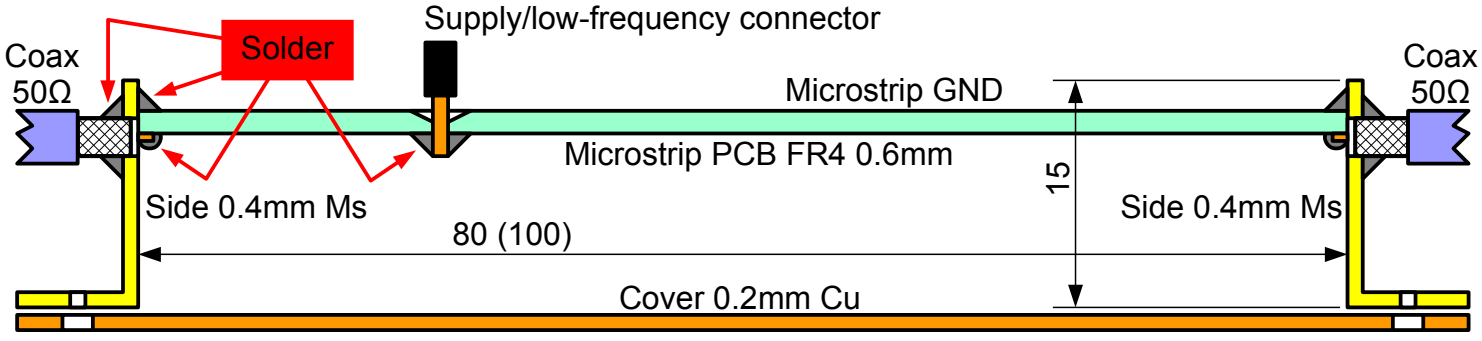
Supply/low-frequency connector
Solder
Coax
50Ω
Coax
50Ω
Microstrip GND
Microstrip PCB FR4 0.6mm
15
Side 0.4mm Ms
Side 0.4mm Ms
80 (100)
Cover 0.2mm Cu

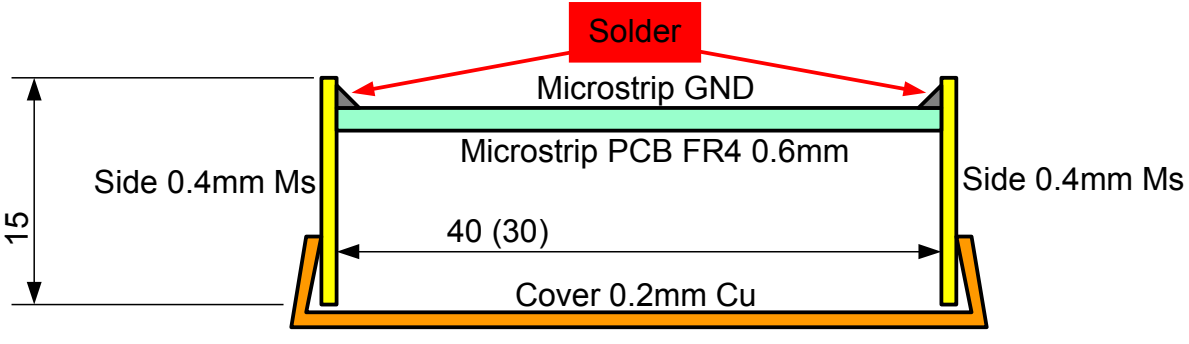
Solder
Microstrip GND
Microstrip PCB FR4 0.6mm
Side 0.4mm Ms
Side 0.4mm Ms
15
40 (30)
Cover 0.2mm Cu