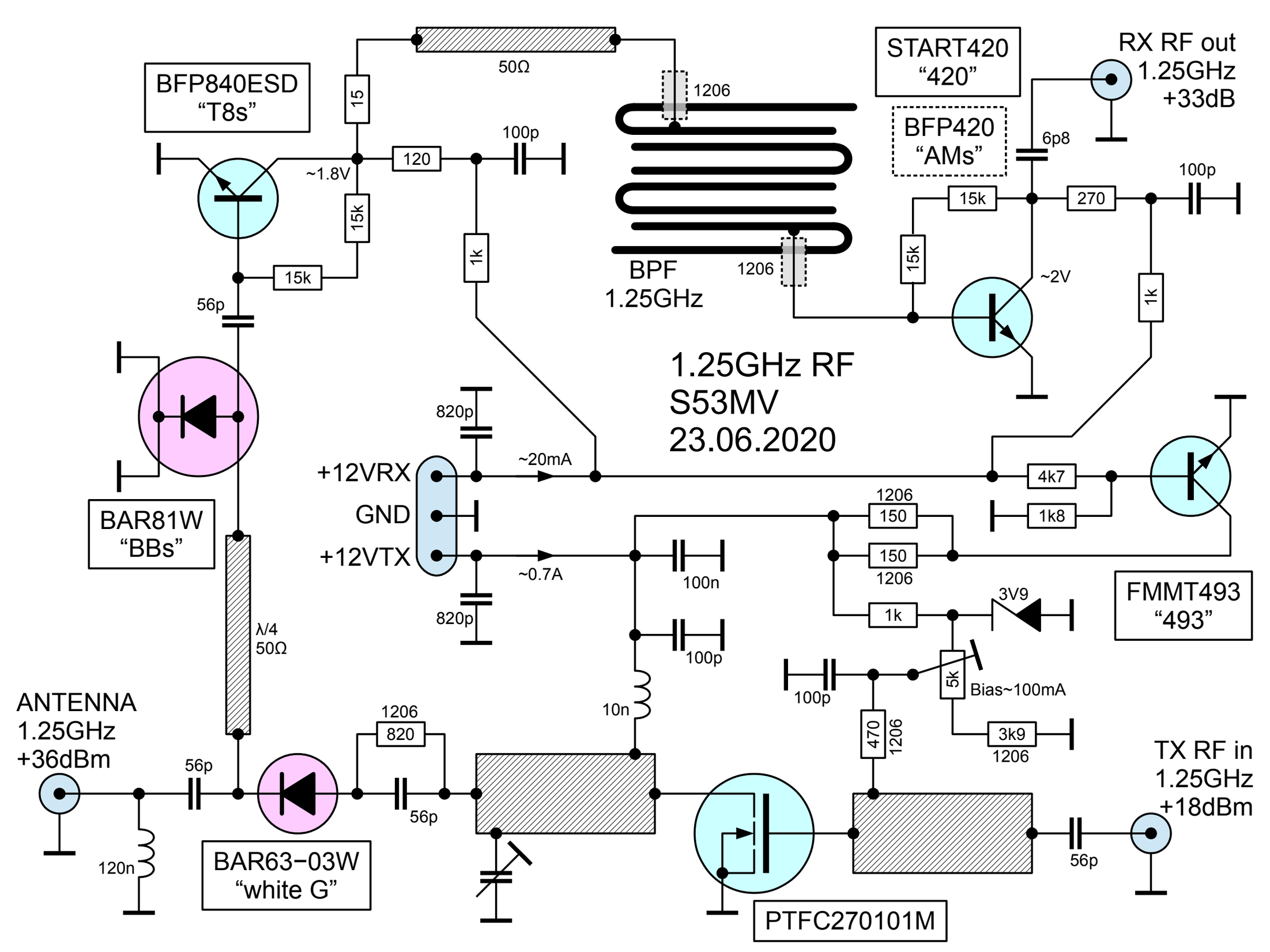
BFP840ESD
"T8s"
50Ω
15
~1.8V
120
100p
15k
15k
1k
56p
1206
BPF
1.25GHz
1206
START420
"420"
RX RF out
1.25GHz
+33dB
BFP420
"AMs"
6p8
100p
15k
270
15k
~2V
1k
1.25GHz RF
S53MV
23.06.2020
820p
+12VRX
GND
+12VTX
~20mA
~0.7A
820p
4k7
1k8
1206
150
150
1206
1k
3V9
100n
100p
10n
100p
5k
Bias~100mA
470
1206
3k9
1206
FMMT493
"493"
BAR81W
"BBs"
λ/4
50Ω
ANTENNA
1.25GHz
+36dBm
56p
1206
820
56p
120n
BAR63−03W
"white G"
PTFC270101M
56p
TX RF in
1.25GHz
+18dBm